Cambridge International AS & A Level

Cambridge International Examinations
Cambridge International Advanced Subsidiary and Advanced Level

CANDIDATE NAME

CENTRE NUMBER | | | | | |

CANDIDATE NUMBER | | | | |

0470437972

PHYSICS **9702/43**

Paper 4 A Level Structured Questions **May/June 2018**

2 hours

Candidates answer on the Question Paper.

No Additional Materials are required.

READ THESE INSTRUCTIONS FIRST

Write your Centre number, candidate number and name on all the work you hand in.
Write in dark blue or black pen.
You may use an HB pencil for any diagrams or graphs.
Do not use staples, paper clips, glue or correction fluid.
DO **NOT** WRITE IN ANY BARCODES.

Answer **all** questions.

Electronic calculators may be used.
You may lose marks if you do not show your working or if you do not use appropriate units.

At the end of the examination, fasten all your work securely together.
The number of marks is given in brackets [ ] at the end of each question or part question.

This document consists of **23** printed pages and **1** blank page.

DC (RW) 163311
© UCLES 2018

CAMBRIDGE International Examinations

Data

speed of light in free space	$c = 3.00 \times 10^{8}\,\text{m s}^{-1}$
permeability of free space	$\mu_0 = 4\pi \times 10^{-7}\,\text{H m}^{-1}$
permittivity of free space	$\varepsilon_0 = 8.85 \times 10^{-12}\,\text{F m}^{-1}$
	$(\frac{1}{4\pi\varepsilon_0} = 8.99 \times 10^{9}\,\text{m F}^{-1})$
elementary charge	$e = 1.60 \times 10^{-19}\,\text{C}$
the Planck constant	$h = 6.63 \times 10^{-34}\,\text{J s}$
unified atomic mass unit	$1\,\text{u} = 1.66 \times 10^{-27}\,\text{kg}$
rest mass of electron	$m_e = 9.11 \times 10^{-31}\,\text{kg}$
rest mass of proton	$m_p = 1.67 \times 10^{-27}\,\text{kg}$
molar gas constant	$R = 8.31\,\text{J K}^{-1}\,\text{mol}^{-1}$
the Avogadro constant	$N_A = 6.02 \times 10^{23}\,\text{mol}^{-1}$
the Boltzmann constant	$k = 1.38 \times 10^{-23}\,\text{J K}^{-1}$
gravitational constant	$G = 6.67 \times 10^{-11}\,\text{N m}^2\,\text{kg}^{-2}$
acceleration of free fall	$g = 9.81\,\text{m s}^{-2}$

© UCLES 2018

Formulae

uniformly accelerated motion	$s = ut + \frac{1}{2}at^2$ $v^2 = u^2 + 2as$
work done on/by a gas	$W = p\Delta V$
gravitational potential	$\phi = -\frac{Gm}{r}$
hydrostatic pressure	$p = \rho gh$
pressure of an ideal gas	$p = \frac{1}{3}\frac{Nm}{V}\langle c^2 \rangle$
simple harmonic motion	$a = -\omega^2 x$
velocity of particle in s.h.m.	$v = v_0 \cos \omega t$ $v = \pm \omega\sqrt{(x_0^2 - x^2)}$
Doppler effect	$f_o = \frac{f_s v}{v \pm v_s}$
electric potential	$V = \frac{Q}{4\pi\varepsilon_0 r}$
capacitors in series	$1/C = 1/C_1 + 1/C_2 + \ldots$
capacitors in parallel	$C = C_1 + C_2 + \ldots$
energy of charged capacitor	$W = \frac{1}{2}QV$
electric current	$I = Anvq$
resistors in series	$R = R_1 + R_2 + \ldots$
resistors in parallel	$1/R = 1/R_1 + 1/R_2 + \ldots$
Hall voltage	$V_H = \frac{BI}{ntq}$
alternating current/voltage	$x = x_0 \sin \omega t$
radioactive decay	$x = x_0 \exp(-\lambda t)$
decay constant	$\lambda = \frac{0.693}{t_{\frac{1}{2}}}$

© UCLES 2018

[Turn over

Answer **all** the questions in the spaces provided.

1 **(a)** State Newton's law of gravitation.

.....

.....

.....

.....[2]

(b) A distant star is orbited by several planets. Each planet has a circular orbit with a different radius.

(i) Each planet orbits at constant speed.
Explain whether the planets are in equilibrium.

.....

.....

.....[1]

(ii) The radius of the orbit of a planet is R and the orbital period is T.

Data for some of the planets are given in Fig. 1.1.

planet	R/m	T^2/s^2
c	9.6×10^{10}	2.5×10^{11}
e	4.0×10^{11}	1.8×10^{13}
g	2.1×10^{12}	2.6×10^{15}

Fig. 1.1

The relationship between R and T is given by the expression

$$R^3 = kT^2.$$

© UCLES 2018

1. Show that the constant k is given by the expression

$$k = \frac{GM}{4\pi^2}$$

where G is the gravitational constant and M is the mass of the star.

[3]

2. Use data from Fig. 1.1 for the three planets and the expression for k to calculate the mass M of the star.

$M =$ ..... kg [3]

[Total: 9]

2 A metal plate is made to vibrate vertically by means of an oscillator, as shown in Fig. 2.1.

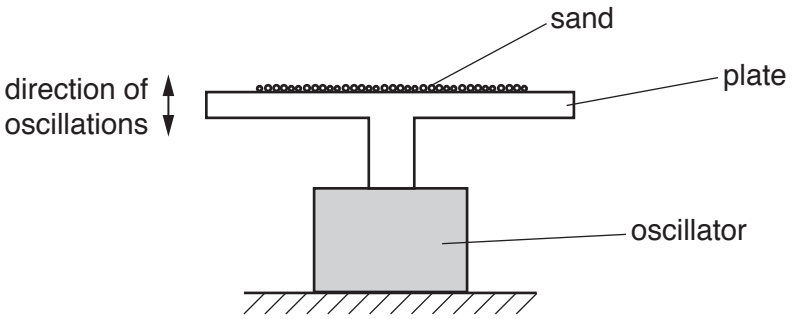

Fig. 2.1

Some sand is sprinkled on to the plate.

The variation with displacement y of the acceleration a of the sand on the plate is shown in Fig. 2.2.

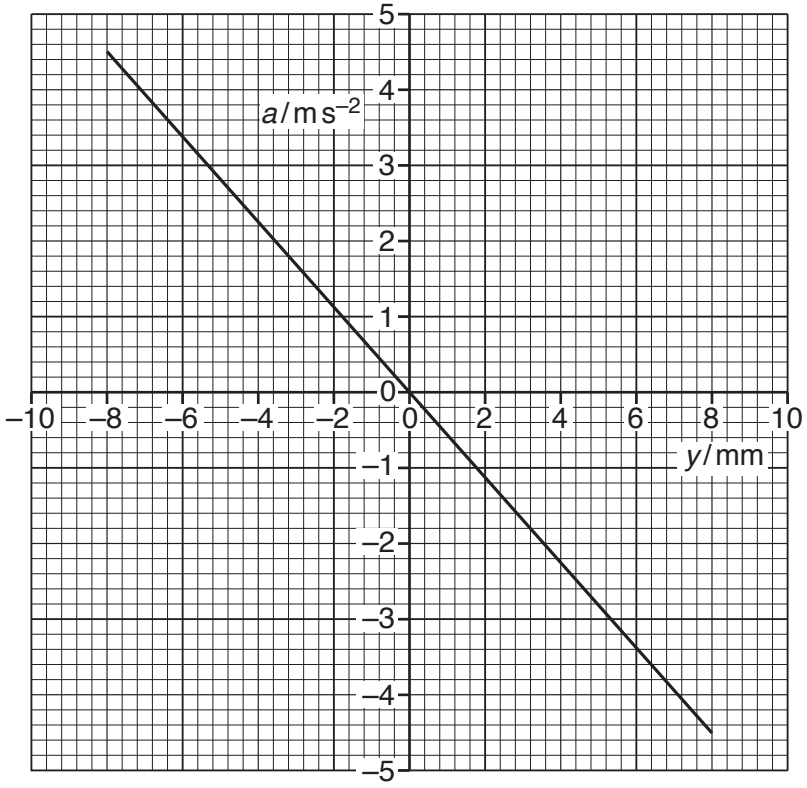

Fig. 2.2

(a) (i) Use Fig. 2.2 to show how it can be deduced that the sand is undergoing simple harmonic motion.

.....

.....

.....

.....[2]

© UCLES 2018

(ii) Calculate the frequency of oscillation of the sand.

frequency = ... Hz [2]

(b) The amplitude of oscillation of the plate is gradually increased beyond 8 mm. The frequency is constant.

At one amplitude, the sand is seen to lose contact with the plate.

For the plate when the sand first loses contact with the plate,

(i) state the position of the plate,

.....[1]

(ii) calculate the amplitude of oscillation.

amplitude = ... mm [3]

[Total: 8]

© UCLES 2018

[Turn over

3 (a) (i) State what is meant by the *internal energy* of a system.

.....

.....

.....

.....[2]

(ii) Explain why, for an ideal gas, the change in internal energy is directly proportional to the change in thermodynamic temperature of the gas.

.....

.....

.....

.....

.....[3]

(b) A cylinder of volume $1.8 \times 10^4\,\text{cm}^3$ contains helium gas at pressure $6.4 \times 10^6\,\text{Pa}$ and temperature 25 °C.
Helium gas may be considered to be an ideal gas consisting of single atoms.

Calculate the number of helium atoms in the cylinder.

number = ...[3]

[Total: 8]

© UCLES 2018

4 Piezo-electric transducers are used for the generation of ultrasonic waves.

(a) State one other use, apart from in ultrasound, of piezo-electric transducers.

.....

.....[1]

(b) Explain the main principles behind the **use** of ultrasound to obtain diagnostic information about internal body structures.

.....

.....

.....

.....

.....

.....

.....

.....

.....

.....[6]

[Total: 7]

5 A geostationary satellite orbits the Earth with a period of 24 hours.

(a) State

(i) the direction of the orbit about the Earth,

.....[1]

(ii) the position of the satellite relative to the Earth's surface,

.....[1]

(iii) a typical frequency for communication between the satellite and Earth.

frequency = ... Hz [1]

(b) A signal transmitted from Earth to a satellite has an initial power of 3.0 kW. The signal power received by the satellite is attenuated by 195 dB.

(i) Calculate the signal power received by the satellite.

power = ... W [3]

(ii) By reference to your answer in **(i)**, explain why different frequencies are used for the up-link and the down-link in communication with the satellite.

.....

.....

.....

.....[2]

[Total: 8]

© UCLES 2018

6 **(a)** State what is meant by *electric field strength*.

.....

.....[1]

(b) An isolated metal sphere A of radius 26 cm is positively charged. Sphere A is shown in Fig. 6.1.

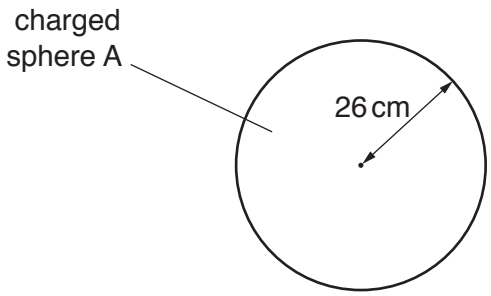

Fig. 6.1

Electrical breakdown (a spark) occurs when the electric field strength at the surface of the sphere exceeds $2.0 \times 10^4\,\text{V m}^{-1}$.

Calculate the maximum charge Q that can be stored on the sphere.

Q = ... C [2]

(c) A second isolated metal sphere B, also with charge $+Q$, has a radius of 52 cm.

Calculate the additional charge, in terms of Q, that may be stored on this sphere before electrical breakdown occurs.

additional charge = ...[2]

[Total: 5]

© UCLES 2018

[Turn over

7 **(a)** Explain what is meant by the *capacitance* of a parallel plate capacitor.

.....

.....

.....

.....[3]

(b) A parallel plate capacitor C is connected into the circuit shown in Fig. 7.1.

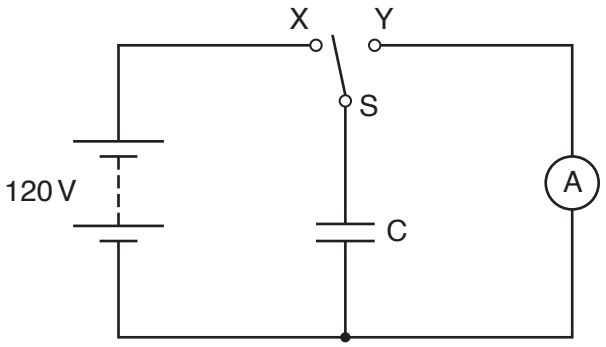

Fig. 7.1

When switch S is at position X, the battery of electromotive force 120 V and negligible internal resistance is connected to capacitor C.
When switch S is at position Y, the capacitor C is discharged through the sensitive ammeter.

The switch vibrates so that it is first in position X, then moves to position Y and then back to position X fifty times each second.

The current recorded on the ammeter is 4.5 μA.

Determine

(i) the charge, in coulomb, passing through the ammeter in 1.0 s,

charge = ... C [1]

© UCLES 2018

(ii) the charge on one plate of the capacitor, each time that it is charged,

charge = ... C [1]

(iii) the capacitance of capacitor C.

capacitance = ... F [2]

(c) A second capacitor, having a capacitance equal to that of capacitor C, is now placed in series with C.

Suggest and explain the effect on the current recorded on the ammeter.

.....

.....

.....[2]

[Total: 9]

8 **(a)** Negative feedback is often used in amplifiers incorporating an operational amplifier (op-amp).

State

(i) what is meant by *negative feedback*,

.....

.....

.....[2]

(ii) two effects of negative feedback on the gain of an amplifier.

1. .....

.....

2. .....

.....
[2]

(b) An ideal op-amp is incorporated into the amplifier circuit shown in Fig. 8.1.

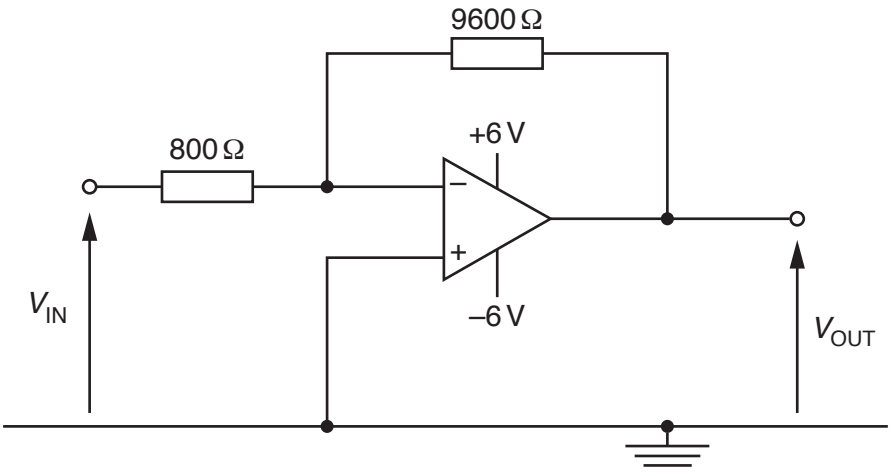

Fig. 8.1

(i) Calculate the gain *G* of the amplifier circuit.

G = ...[2]

(ii) Determine the output potential difference V_{OUT} for input potential differences V_{IN} of

1. −0.10 V,

V_{OUT} = ... V

2. +1.3 V.

V_{OUT} = ... V
[2]

(iii) The gain of the amplifier shown in Fig. 8.1 is constant.

State one change that can be made to the circuit of Fig. 8.1 so that the amplifier circuit monitors light intensity levels, with the magnitude of the gain decreasing as light intensity increases.

.....

.....[1]

[Total: 9]

9 A rigid copper wire is held horizontally between the pole pieces of two magnets, as shown in Fig. 9.1.

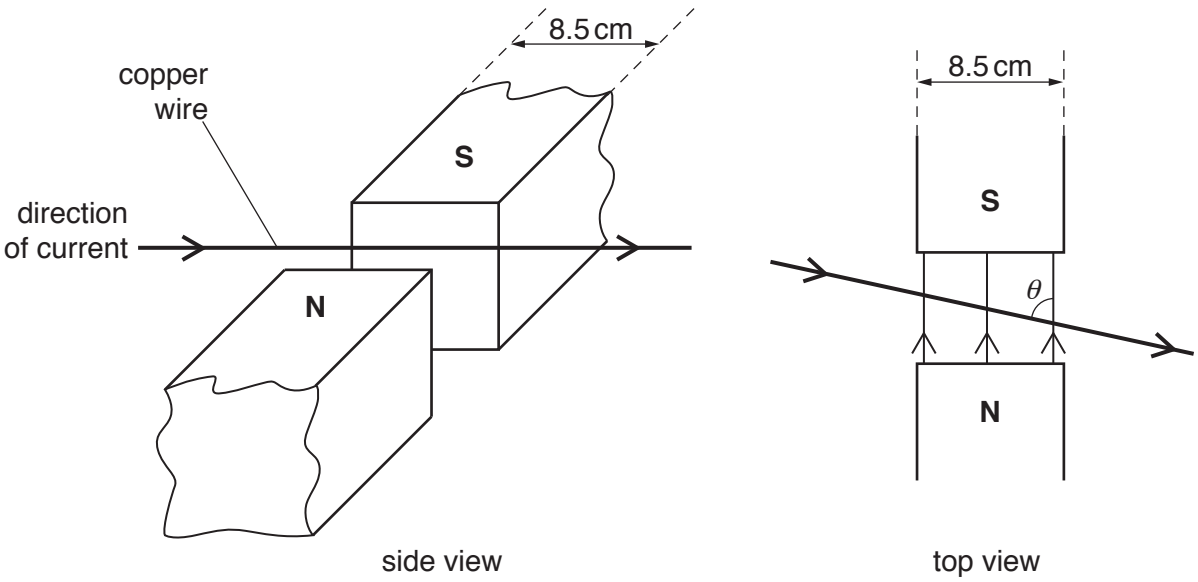

Fig. 9.1

The width of each pole piece is 8.5 cm.
The uniform magnetic flux density B in the region between the poles of the magnets is 3.7 mT and is zero outside this region.
The angle between the wire and the direction of the magnetic field is θ.
The current in the wire is in the direction shown on Fig. 9.1.

(a) By reference to the **side** view of Fig. 9.1, state and explain the direction of the force on the **magnets**.

.....

.....

.....

.....[2]

(b) The constant current in the wire is 5.1 A.

(i) For angle θ equal to 90°, calculate the force on the wire.

force = ... N [2]

© UCLES 2018

(ii) The angle θ is changed to 60°.

The length of wire in the magnetic field is $\left(\frac{8.5}{\sin 60°}\right)$ cm.

Calculate the force on the wire.

force = ... N [1]

(c) The constant current in the wire is now changed to an alternating current of frequency 20 Hz and root-mean-square (r.m.s.) value 5.1 A.

The angle between the wire and the direction of the magnetic field is 90°.

On Fig. 9.2, sketch a graph to show the variation with time t of the force F on the wire for two cycles of the alternating current.

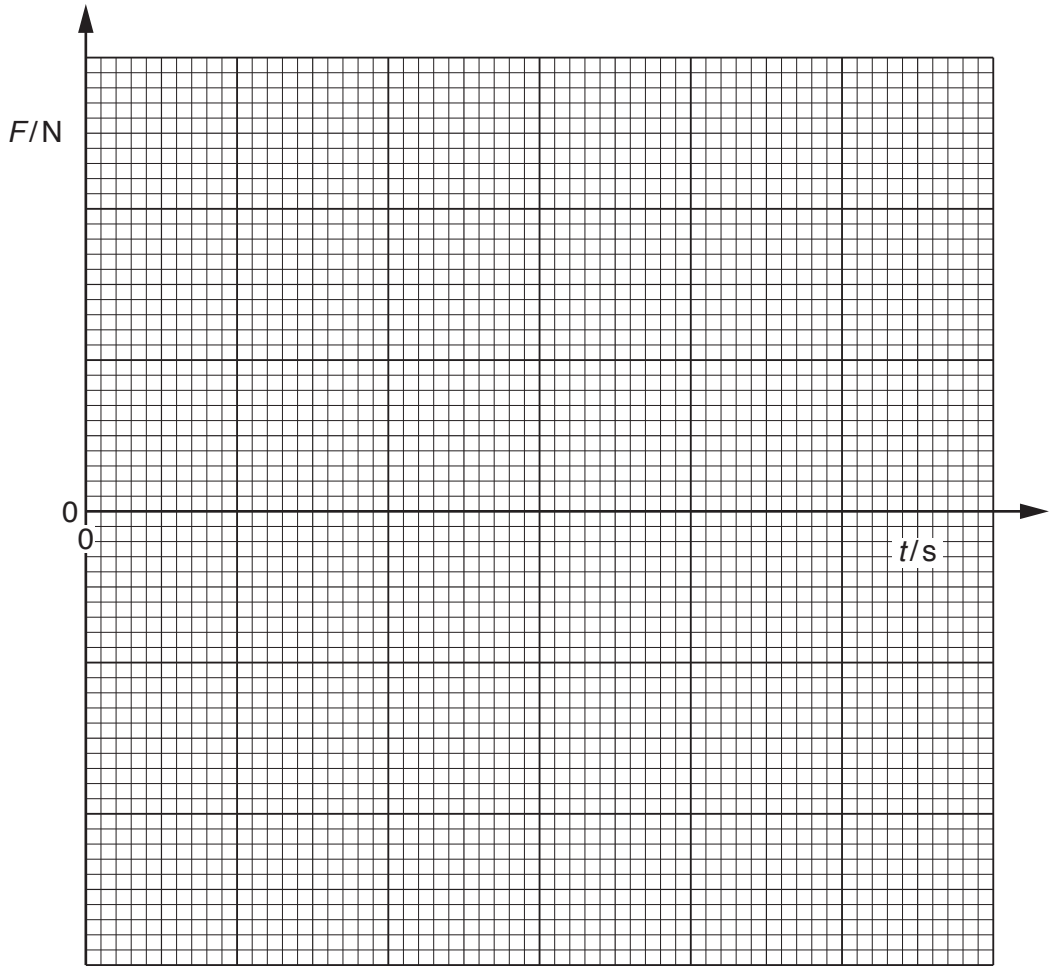

Fig. 9.2

[3]

[Total: 8]

10 (a) State Faraday's law of electromagnetic induction.

.....

.....

.....

.....[2]

(b) A coil of insulated wire is wound on to one end of a ferrous core and connected to a battery, as shown in Fig. 10.1.

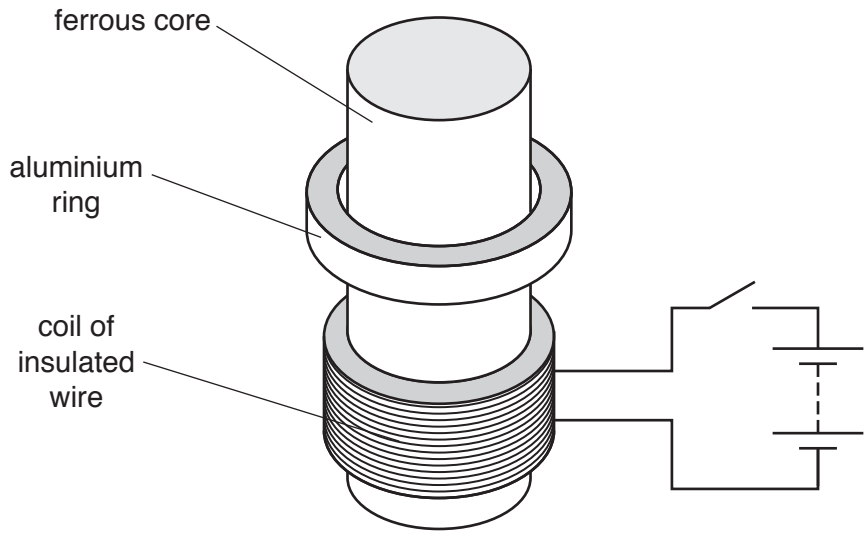

Fig. 10.1

An aluminium ring is placed on the core. The ring can move freely along the length of the core.

The switch is initially open.

Use Faraday's law and Lenz's law to explain why the aluminium ring jumps upwards when the switch is closed.

.....

.....

.....

.....

.....

.....

.....[4]

[Total: 6]

© UCLES 2018

11 (a) (i) Explain what is meant by a *photon*.

.....

.....

.....[2]

(ii) By reference to intensity of light, state one piece of evidence provided by the photoelectric effect for a particulate nature of light.

.....

.....[1]

(b) Some electron energy levels in a solid are illustrated in Fig. 11.1.

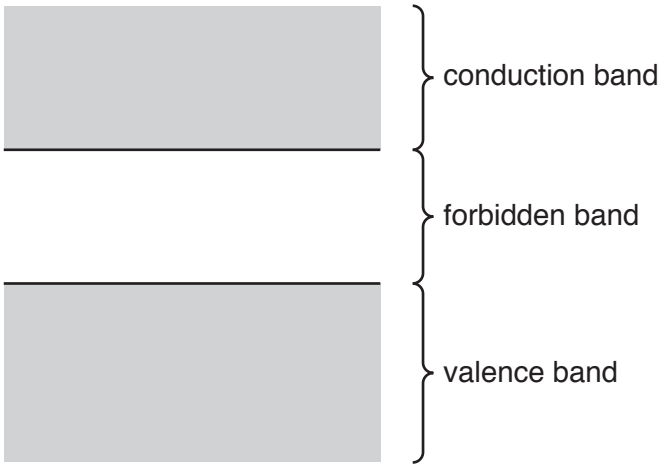

Fig. 11.1

A semiconductor material has a very high resistance in darkness.
Light incident on the semiconductor material causes its resistance to decrease.

Explain the resistance of the semiconductor material in different light conditions.

.....

.....

.....

.....

.....

.....[5]

[Total: 8]

© UCLES 2018

12 An X-ray beam is used to produce an image of a model of a thumb.
A parallel beam of X-ray radiation of intensity I_0 is incident on the model, as illustrated in Fig. 12.1.

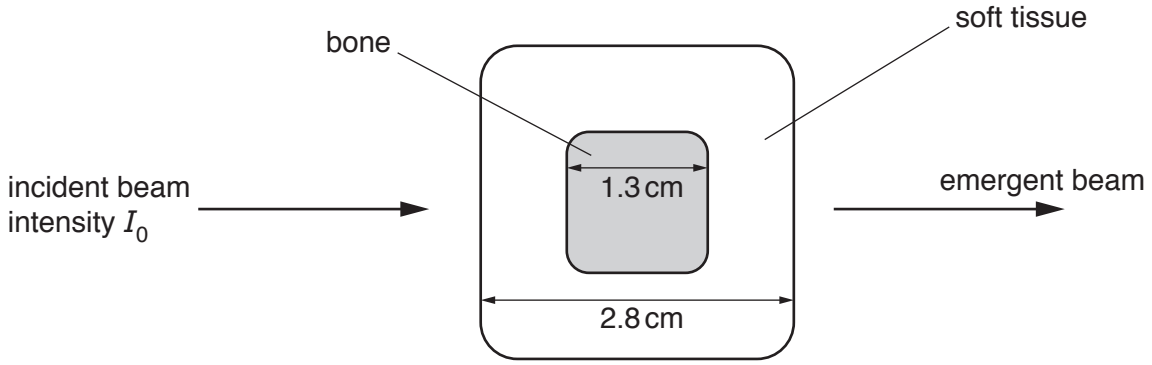

Fig. 12.1

Data for the attenuation (absorption) coefficient μ in bone and in soft tissue are shown in Fig. 12.2.

	μ/cm^{-1}
bone	3.0
soft tissue	0.90

Fig. 12.2

(a) Calculate, in terms of the incident intensity I_0 of the X-ray beam, the intensity of the beam after passing through

(i) a thickness of 2.8 cm of soft tissue,

intensity = ... I_0 [2]

© UCLES 2018

(ii) the bone and soft tissue, as shown in Fig. 12.1.

intensity = ... I_0 [2]

(b) (i) State what is meant by the *contrast* of an X-ray image.

.....

.....

.....[2]

(ii) By reference to your answers in **(a)**, suggest whether the X-ray image of the model has good contrast.

.....

.....

.....[1]

[Total: 7]

13 **(a)** State what is meant by *radioactive decay*.

.....

.....

.....

.....[2]

(b) The variation with time t of the number N of technetium-101 nuclei in a sample of radioactive material is shown in Fig. 13.1.

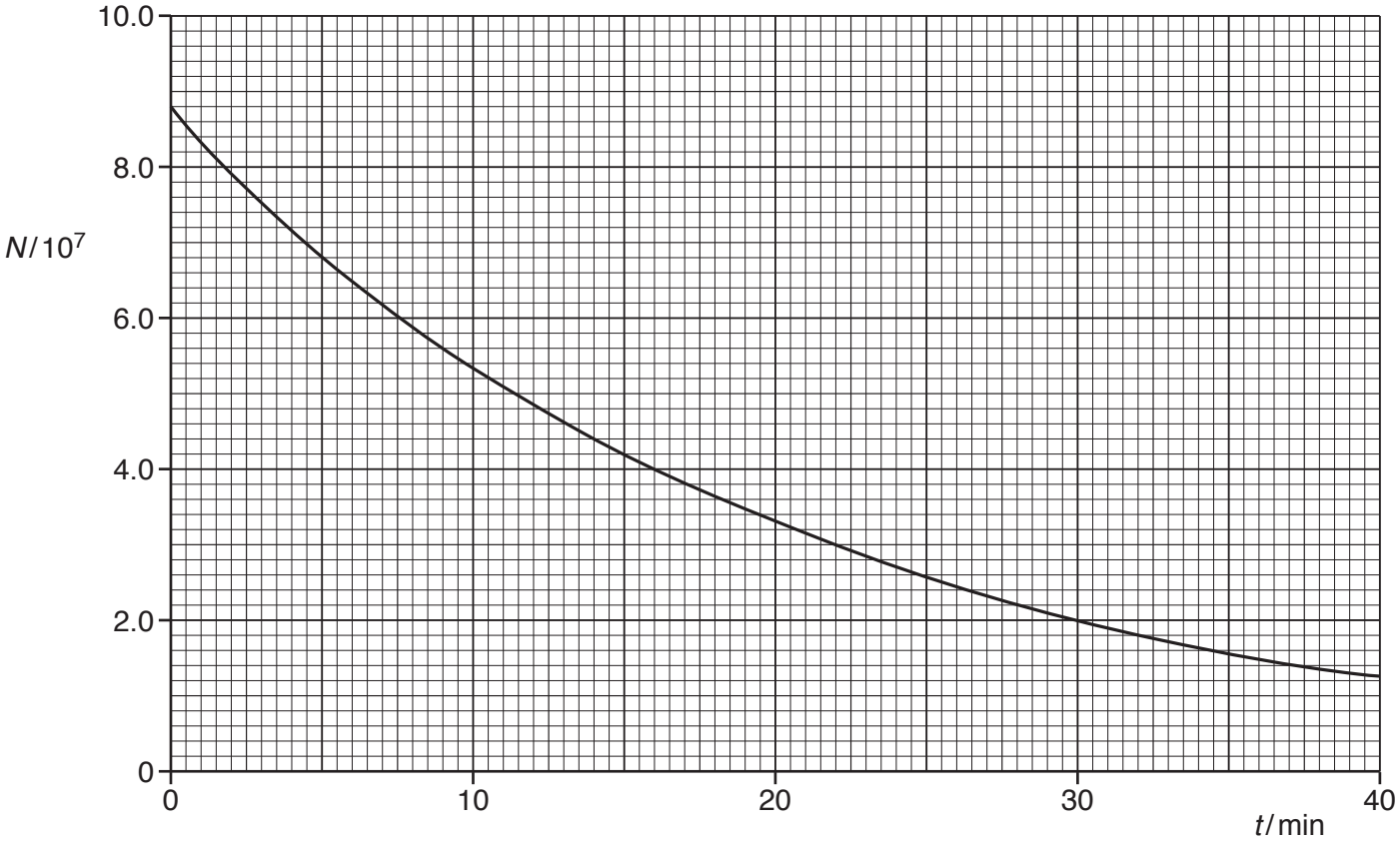

Fig. 13.1

(i) Use Fig. 13.1 to determine the activity, in Bq, of the sample of technetium-101 at time $t = 14.0$ minutes. Show your working.

activity = ... Bq [4]

(ii) Without calculating the half-life of technetium-101, use your answer in **(i)** to determine the decay constant λ of technetium-101.

λ = ... s^{-1} [2]

[Total: 8]

© UCLES 2018

BLANK PAGE

Permission to reproduce items where third-party owned material protected by copyright is included has been sought and cleared where possible. Every reasonable effort has been made by the publisher (UCLES) to trace copyright holders, but if any items requiring clearance have unwittingly been included, the publisher will be pleased to make amends at the earliest possible opportunity.

To avoid the issue of disclosure of answer-related information to candidates, all copyright acknowledgements are reproduced online in the Cambridge International Examinations Copyright Acknowledgements Booklet. This is produced for each series of examinations and is freely available to download at www.cie.org.uk after the live examination series.

Cambridge International Examinations is part of the Cambridge Assessment Group. Cambridge Assessment is the brand name of University of Cambridge Local Examinations Syndicate (UCLES), which is itself a department of the University of Cambridge.